A TOOLKIT FOR VACANT DANCE HALLS:

Keeping a dance hall in good condition when it is rarely used

TEXAS DANCE HALL PRESERVATION ESTD 2007

July 25, 2018

A TOOLKIT FOR VACANT DANCE HALLS:

KEEPING A DANCE HALL IN GOOD CONDITION WHEN IT IS RARELY USED

ANN BENSON MCGLONE, LLC + PRESERVATION MATTERS

This project has been funded in part by grants from
The Texas Preservation Trust Fund, The Summerlee Foundation,
The Fondren Fund for Texas (National Trust for Historic Preservation),
and The Texas Historical Foundation.

Usablility Evaluation Volunteers:
Becky Hoffman
Valerie Kanak Poyner
Nancy Richards
Paige Schendler

Special Thanks to the following Dance Halls:

Appelt's Hill Gun Club
Deanville Sons of Hermann Lodge #301
Freyburg Hall
Grapetown Schuetzen Verein
Peters Community Hall (Austin County Gun Club)
Swiss Alp Dance Hall
Hye Dance Hall
Mixville Sunrise Hall
Sts. Peter and Paul Catholic Church Hall
Bellville Turnverein Pavillion

Welcome to the Texas Dance Hall Preservation Toolkit for "mothballing" dance halls. Historic dance halls are an important part of our Texas heritage, and we salute the hard work of the dedicated people who care for them.

Since Texas was founded, an estimated 1,000 dance halls were built in the Lone Star State, but today only around 400 survive. They were built by social and service clubs, fraternal organizations, agricultural societies, and churches, as well as by individual Texans who made a business of presenting live music and dancing. No matter what their condition is today or how they are or are not being used, our state's dance halls are an irreplaceable treasure and can still be the cornerstone of a community.

Over the years, we have witnessed the heartbreaking loss of several Texas dance halls that could have been saved and put back into productive use. When halls are not used very often, small problems can quickly become big problems. This document was created to help owners and other stewards protect historic Texas dance halls that are vacant or infrequently used.

The term "mothballing" means to protect from damage, just as people used to place mothballs in a dresser or closet to keep moths from eating their woolen clothing. When applied to buildings, "mothballing" refers to activities that prevent vandalism and unauthorized access ("secure"), keep water and weather from damaging the building ("weatherize"), and prevent structural problems that might cause walls to lean or a roof to collapse ("stabilize"). Regular inspections can identify problems when they are still easy — and inexpensive — to fix. Texas Dance Hall Preservation (TDHP) has prepared this toolkit to help you do just that.

We want to thank all of the dance hall owners, members, and volunteers for everything that you do to care for and maintain these halls for future generations. We hope that this toolkit can be a valuable resource for you.

Steph McDougal, President

TABLE OF CONTENTS

ORGANIZATION AND USE OF GUIDELINES

PURPOSE

Chapter 1 describes the intent of the toolkit, specifically that the toolkit is written for the most vulnerable Texas dance halls that are vacant or rarely used. The chapter explains and establishes goals with the intent that owners, tenants, and users of dance halls have a clear understanding of how to deal with the common problems that affect these buildings.

Read this chapter to gain an understanding of the importance of preserving historic dance halls. Authenticity and genuine character are described to help illustrate what is important to retain in old dance halls. And more importantly what not to lose or replace during emergency repairs or long term renovations.

CHAPTER 1

TYPICAL DANCE HALL CONSTRUCTION

Chapter 2 helps identify your building type: What is the basic form of the building and what are its main parts? Understanding the parts of the building as well as its basic building form will help in figuring out where its strengths and weaknesses are in construction problems. All buildings have vulnerable parts that can become problem areas. This section also discusses the site of building, as it can contribute to construction problems.

CHAPTER 2

COMMON PROBLEMS AND TREATMENTS

Chapter 3 helps identify issues that are common with many aging and vacant buildings. Treatments offered are common sense solutions that are simple and easy to fix. When completed they will help extend the life of your dance hall.

The problems are listed in priority: 1) Stabilization; 2) Weatherization; and 3) Security. At stabilization the goal is to make sure the building will not fall down. Weatherization is to keep the elements, specifically water, out of the building, as this will cause long term damage. Finally after the building is stable and weather tight, we examine other threats to the building such as vandalism or faulty systems.

CHAPTER 3

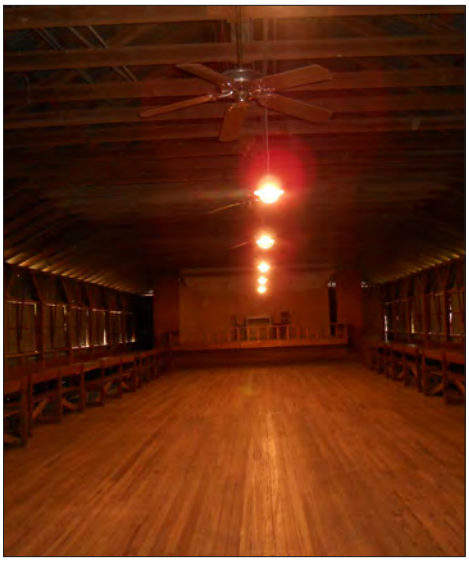

CHECKLIST

Chapter 4 helps owners assess their buildings in a systematic way. What needs stabilization? What needs to be weatherized? And how is the building made secure? The checklists establish a schedule of maintenance, that helps build a yearly maintenance record. Future stewards of the dance hall will find these records useful in the years to come as personal memory fades and membership of a management board rotates.

CHAPTER 4

FINDING A PROFESSIONAL

Chapter 5 provides guidance on how to find a professional such as an architect, preservation architect, or a structural engineer when your dance hall is confronted with problems.

CHAPTER 5

CHAPTER 1: PURPOSE

When dance halls are vacant or infrequently used, small problems can go unnoticed until there is a crisis. If a small leak from a pipe is left unchecked and goes unnoticed, a crisis is at hand. By the time the leak is found the wooden dance floor may have become soggy, then weakened, and eventually rotten.

This Toolkit is written to prevent damage and deterioration while dance halls are vacant or infrequently used. These buildings are more prone to deterioration than those buildings that are regularly used. Like a car needing to be driven, a building needs to be used as often as possible. The best favor you can do for a building is to use it. Small problems are detected before they become big ones and a lot of money is saved in repairs.

If you can't open your dance hall on a regular schedule, then this Toolkit is for you. Problems are all identified and are fixable before a sudden loss occurs. If circumstances are such that the building must be vacant or not much used, this Toolkit will help point out typical building problems. The Toolkit also tells how to address problems in both a temporary way, with a quick fix, and then in a permanent way.

The Goals of the Toolkit are three: to stabilize, to weatherize, and then to secure your dance hall. And remember the Golden Rule: First remove the source(s) of the trouble! Reseal the leaking roof and ventilate or drain the wet foundation. Thereafter, remove the causes of overloading.

However, one caution: We can unwittingly damage a building with simplistic, and mismatched alterations. For example, placing skirting around your raised foundation may look more attractive, but it can seal in moisture around wooden floor beams, causing them to rot. Sometimes we can do more harm than good.

GOALS OF THE TOOLKIT

Stabilize

The highest priority is to keep a vacant dance hall from collapsing. Roofs, foundations, walls, interior framing, cupolas, and porches all have structural parts that may need added reinforcement, or structural stabilization. As buildings age, structural changes can occur. Non load-bearing elements begin to carry the load putting added stress on parts not intended to be structural. Structural members might fail altogether if they have been weakened by exposure to the elements. The important goal is to keep the structure standing. Ideally, structural stabilization should be done by a qualified contractor under the direction of a structural engineer or a preservation specialist. Sometimes temporary emergency measures must be taken to keep a building from collapsing.

Weatherize

After the dance hall has been stabilized, the next goal is to secure the exterior, from moisture penetration and wind damage. Keeping the rain water out of the building is critical. Water can enter through the roof and walls. It can also enter under the building weakening the foundation. Water in a building damages beams, rafters, floors, walls and historic woodwork. Water also attracts pests, creates mold and mildew, and encourages damaging plant growth. This is why weatherizing a dance hall is important.

Secure

Once a dance hall is not in danger of collapsing and is weather tight, the next step is protecting the building from vandals, break-ins, and natural disaster like fire. Your dance hall is irreplaceable; it is vital that vulnerable points of entry are sealed from vandalism. Fire is another critical security issue; existing utilities, both electric and gas can cause serious problems if not properly maintained. Vacant building are vulnerable. Alert police and fire services that the building is vacant.

Retain authentic character

Texas dance halls are memorable because they have authentic Texas character. Each dance hall has unique character with defining, architectural features that make them genuine. These features are important because they tell the history of the building but also the story of the people who built them. They reflect the heritage and history of the culture that surrounds them.

These features can be lost in a number of ways: through fire, flood, accident, or modification. Even the most well-meaning modification to the building can change its character. Also, additions to the building or demolition of older buildings on the site can diminish the character of the dance hall. Following are some typical character-defining features that make each hall unique:

The dance floor (now rare oak or long-leaf pine)

Outdoor kitchens

The benches

The chairs

The signs (outdoors)

The signs (outdoors)

The signs (indoors)


Historic writing on lumber


Open roof support system


The shutters


Cupola


Stage curtain

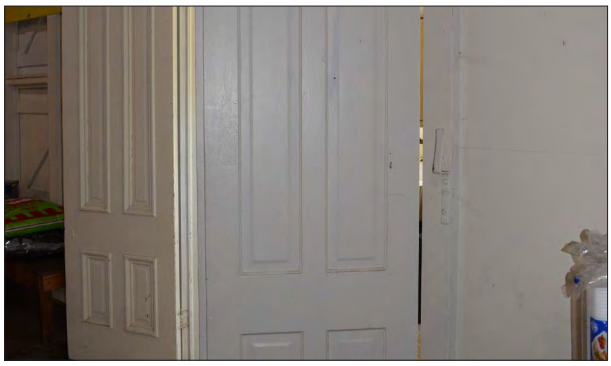
Doors


Door hardware

CHAPTER 2: TYPICAL DANCE HALL CONSTRUCTION

Dance halls were designed and built to provide large open spaces for unobstructed dancing. This required a structural system that could span a large dance floor, without columns getting in the way of dancers. It will be important to understand the basics of these structural systems to quickly see structural problems.

Understanding the form of your building is also important. While many dance halls are rectangular, some are round or many sided with a more complex structural system. Dance halls have often been added on to over time, creating another set of special conditions.

Dance halls are made of many parts. It will be useful to have a common vocabulary to use when doing an assessment of your dance hall.

A BUILDING FORMS

Building forms are the general shape of a building. Recognizing a dance hall's basic form is an important first step in understanding your building. The more complicated the shape, the more complex the structural systems. A buildings basic shape is usually the oldest part of the building. Later additions are often visible as variations to the basic form. This can help an owner better understand how their building has changed over time.

SHAPES

While dance halls come in many shapes and sizes, this toolkit will discuss some of the most common forms. There are many variations, but this will provide a basic understanding.

Rectangles and Squares

Many dance halls are rectangular in shape. Variations include; flat roofed additions, shed roof lean-tos, and semi-circular ends.

Octagons or Hexagons

Some dance halls are generally more circular in shape, having six, eight or more straight sides. There are endless shape variations created by additions, with flat or shed roofs.

B BUILDING PARTS

A dance hall is composed of many parts that make up the whole. The structural system is composed of a foundation, the floor, wall systems including columns, and the roof. These all work in unison to create a stable structure. Once the basic structure of the building is established there are a variety of other parts, both inside and out that contribute to the unique character of a building. Following is an illustrated guide to the common parts that may or may not be found in a specific dance hall.

FOUNDATIONS

The foundation supports the weight of the building and distributes it across the ground. A typical foundation is made of post or piers. Beams are placed across the piers, joists are connected across the beams, flooring is laid on top of the joists creating a stable structure.

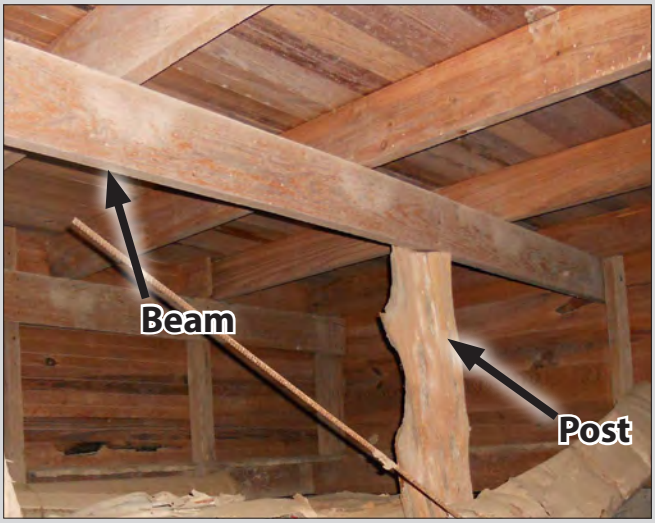

Post and Beam
The simplest foundation system is a post and beam. Like the name implies there are posts that rest on the ground (or are buried in the ground) that hold up beams that span between the posts. Floor joists then rest on these beams. Sometimes the post rest on stones or concrete blocks. A typical foundation renovation might replace the wood posts with concrete posts.

Pier and Beams
Similar to post and beam construction, a pier and beam foundation rest on concrete or masonry piers which extend into the ground. These piers often have spread footings or bell shaped footings beneath the surface.

Perimeter Walls
A continuous wall is laid around the perimeter of the building. Wooden beams rest on this perimeter wall and may span from side to side or on large structures to an intermediate interior concrete wall. Brick or stone are typical materials for the foundation. Recent walls may be constructed of concrete.

Foundations Using Different Materials
Sometimes a dance hall may use more than one type of material in the foundation. This happens over time as different repairs are made on the building. It should be noted the carrying capacity of the different materials may vary.

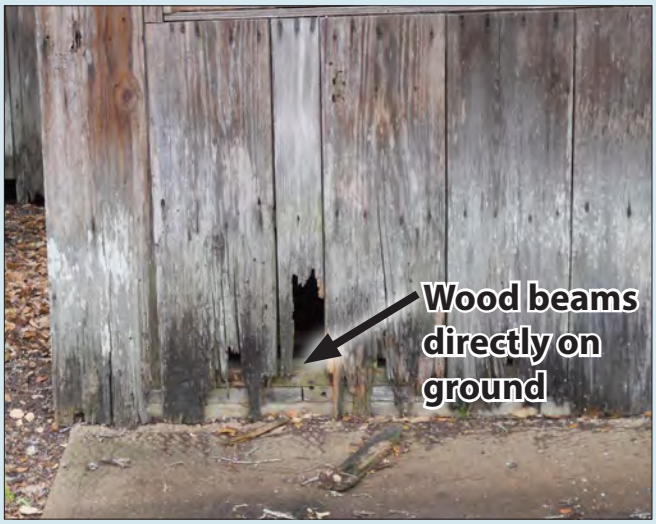

No Foundation
Not all dance halls have foundations. Sometimes the wood floor beams or joists were laid directly on the ground. This makes the foundation more susceptible to deterioration from water or insects.

WALL SYSTEMS

Walls that hold up the roof are called load bearing walls because they bear the weight of the roof. These might not be the most exterior walls, as additions and lean-tos may obscure the load bearing walls.

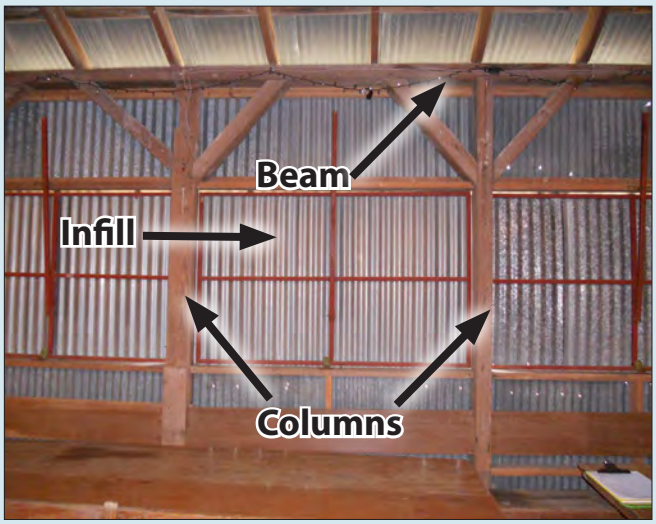

Columns and Infill

A common type of load bearing wall is made of columns spaced around the perimeter linked by a plate or beam. The roof rests on beams that link the columns. The beam is often angle based to the column. The space between the columns can be filled with siding, or left open for hinged shutters. The columns, braces and beams are doing all the work and they should not be removed.

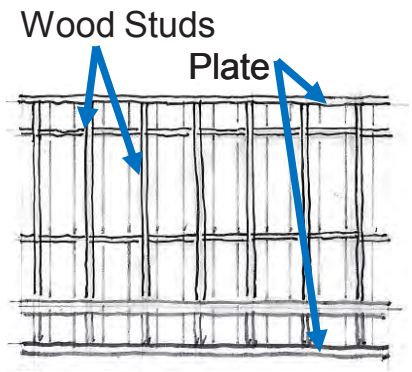

Framed Wall Systems

The exterior walls can have a framing system with studs placed equal distance apart spanning vertically between a top and bottom plate running horizontally at the floor and ceiling. Exterior wood siding, often 1" X 12" boards or corrugated metal, is nailed to these frame walls. Sometimes boards were added to the inside, but often the studs were left exposed. This whole system provides the support for the roof. Removing any of the studs without properly reframing can create problems.

ROOFS

The primary job of roofs is to keep water out. They also must span large distances to provide adequate room for dancing. There are a variety of roofs types used in dance halls to span the dance floors. They were almost all built by hand as there were no manufactured joists and trusses available. This means there is great variety in the framing depending on the skill and knowledge of the original builders. Wood can only span so far without needing the support of a column. The larger the span the more complicated the framing system. The distance that can be spanned depends on the type of wood and the size of the members. Adding weight to the roof structures, removing support walls or columns, or foundation movement can affect the stability of roofs.

Gable Roofs

The gable roof is a typical roof. The two most common framing methods for a gable roof are rafters with a ridge beam or a truss system.

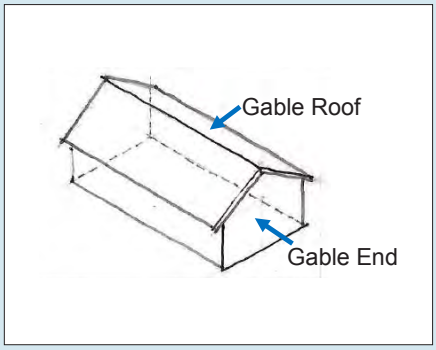

Hipped Roofs

Hipped roofs are similar to gable roofs, except that the ends are also pitched.

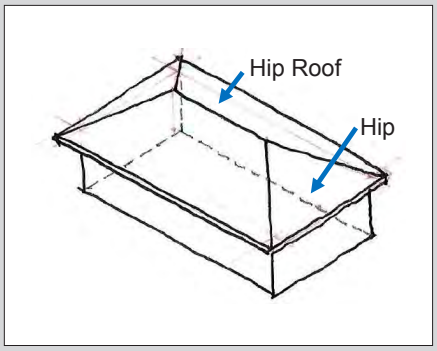

Roofs on Hexagonal and Octagonal Structures

The roof framing on these "round" structures is much more complicated. Commonly they have a central column made of wood or concrete. Large beams run from the central column to the corners of the building. There can be a rectangular framed structure above the column that distributes the weight. Sometimes there are one or two singular columns that rise above the main column.

Shed Roofs

Shed roofs are roofs that only slope in one direction. These are often found on additions.

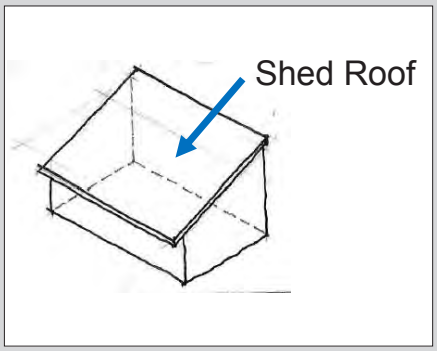

Flat roofs

Even though they are called flat roofs they often have a slight slope so that water does not pond on the roof. A ¼ inch slope for every foot is the minimum to avoid ponding.

Cupolas
At the highest point of a roof, you might find a cupola. A cupola is a small structure that extends upward beyond the roof framing. A cupola is used to ventilate the dance hall. It takes advantage of hot air rising to pull air up through the building and out the top, creating air circulation.

OUTSIDE

Porches, Stairs and Entry Doors
An entry might be a stoop, or an elaborate porch. It may have a simple cantilevered awning or a gathering space. The doors come in a variety of styles from barn-doors to fancy carved doors.

Side Wall Openings for Ventilation
A portion of the sides of dance halls may simply open to allow light and air into the space. These shutters or side panels can hinge at the top, the bottom or on the side. They are often made of the same materials as the siding, and are propped open from the inside.

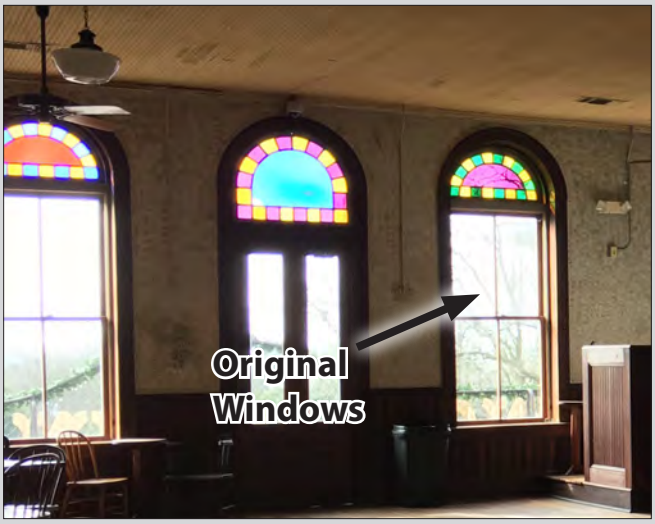

Windows
Original wood windows are important features. They come in many shapes and sizes. They are often double hung windows that are operable. Window panes can vary in size and placement, the windows illustrated are two-over-two. Original glass is often wavy. Aluminum windows are not historic.

Original Materials
The original siding and roof materials are important elements of the historic dance halls and should be preserved if possible. Original siding is often wood board and batten as illustrated but siding could be plain boards laid vertical or horizontal. Some dance halls have replaced wood siding with other materials such as corrugated metal or asphalt singles. These replacement materials are generally not original. Original roofs may be standing seam metal, corrugated metal or wood singles.

INSIDE

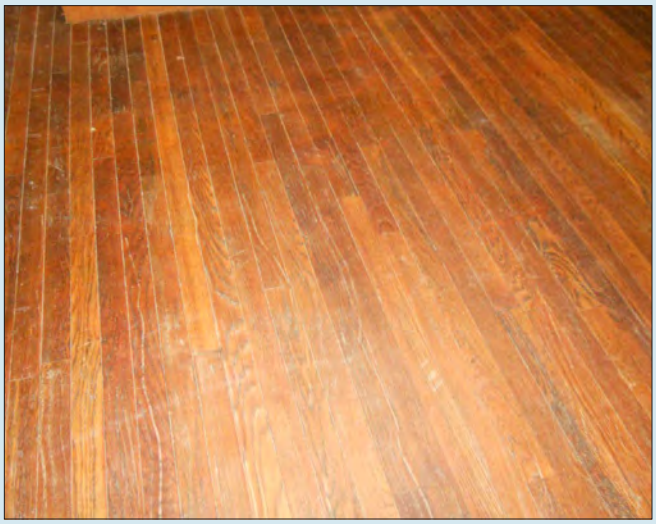

Wood Floors
Original wood dance floors are often made of oak or long leaf pine. Sometimes cypress was used. The width of the boards can vary. Boards can be laid parallel to the front door, perpendicular or at a diagonal. Whether or not a subfloor exists varies from hall to hall.

Perimeter Raised Floors
It is not unusual to find a raised platform around the perimeter of the dance floor. Benches or chairs often line this raised area. These raised areas serve to separate the dancers from those watching. In some dance halls the raised platform is large enough to accommodate tables and chairs.

Stage or Bandstands
Often found in dance halls is a raised area, several feet in height for the band. These were either built into the hall or may have been added as an addition. Access to the raised stage is often up simple wooden steps that are located in front or to the side. Sometimes the steps are accessed from the rear or through a separate backstage area.

Interior Signs
Historic signs of all kind may be present in the dance hall. Local historic advertising can be found painted on the inside walls, on canvas backdrops or around the stage walls. Other signs may include rules for behavior or special events.

Bars, Kitchens and Restrooms
Many dance halls contain separate bar and/or kitchen areas. These may have been original to the hall or added later. In some cases, they are located in separate buildings next to the hall. Similarly, halls may contain restrooms that were original or were added later; restrooms also may be located in separate structures.

CHAPTER 3: COMMON PROBLEMS AND TREATMENTS

While each dance hall is unique, many dance halls were built between the 1880s and the 1920s, using similar construction techniques of the time. Dance halls were often constructed by local builders and volunteers, who used construction methods and techniques that were in common use. This chapter identifies common problems associated with dance hall construction, short term solutions and propose long-term solutions that may require professional assistance.

We have divided the Chapter into 3 parts – beginning with Stabilization to keep dance halls from falling down; followed by Weatherization to slow the deterioration process; and finally, by Security to keep dance halls safe from vandalism and fire. In each section we identify common problems, discuss causes of the problems and offer treatments. The intent is to identify potential problems early and pursue remedies to fix them before they become more serious. It is also to provide solution ideas that will not harm the dance halls. Inappropriate "fixes" can often harm the building or change the original character.

A STABILIZATION:
PROBLEMS AND TREATMENT

SAGGING ROOF PROBLEMS

An exterior visual inspection will reveal if the roof ridge is straight or if it is sagging. If a visual inspection of the roof shows that the ridge beam is bowing, or that there are visible valleys in the roof, it is important to identify the problem, then determine the cause. Listed below are common failures to look for inside the dance hall that cause sagging roof ridges or roof valleys.

FIG. 1: Rafters or joists are spaced further apart than modern construction. Look for sagging beams or ridge lines.

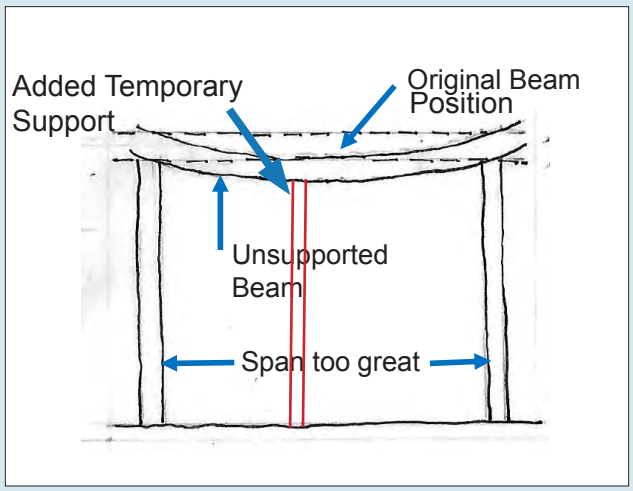

FIG. 2: A diagram of a sagging beam, add post to center to give temporary support.

Problem: Rafters or joists spaced too far apart

Historic buildings often have construction that is not as rigidly exact as modern construction. Rather than rafters or joists being set exactly 12 inches on center, historic dance halls may have the rafters spaced between 18-24 inches apart or greater. It is not uncommon in historic buildings that the distance between rafters varies from rafter to rafter. (FIG. 1)

Treatment:

i. Immediate: Prop the rafters or joists up from below, and support between the rafter and the inside floor. If possible rest temporary supports over floor beams. Try and use at least a 2X6 board as a prop. (FIG. 2)

ii. Long Term: A structural engineer should assess the building and make recommendations.

Problem: Inadequate size of lumber used to span a great distance

The greater the distance that needs to be spanned, the greater the size the lumber needs to be. If the dimension of the lumber is too small or the distance too great, the beams, rafters or joists will sag.

Treatment:

i. Immediate: Add a piece of wood equal in size to both sides of the original rafter.

Bolt it in place. This is called a sister or "sistering." The sister pieces should be long enough to help the original rafter bear on plates or beams. (FIG. 3)

ii. Long Term: A structural engineer should assess the building and make recommendations.

Problem: Additional weight added to roof structure

Over the years fans, gas heaters, speakers, signs, or HVAC equipment have often been added to or hung off the original structure. Sometimes plywood sheathing and layers of old shingles contribute to the weight. The added weight can cause sagging.

Treatment:

i. Immediate: In abandoned or rarely used dance halls, remove objects that are adding weight to the original structure. If the objects are historic, such as signs or stage curtains, do not throw them away, but save them for possible reuse after a long-term solution is found. (FIG. 4)

ii. Long Term: A structural engineer should assess the structure and make recommendations. Generally, a structural engineer will recommend design modifications to support specific conditions of added weight.

Problem: Deterioration of wooden joists or rafters due to water damage or insects

Water damage from leaks in the roof or insects might have weakened the structural integrity of the roof members. (FIG. 5)

Treatment:

i. Immediate: Add a piece of wood equal in size to both sides of the original rafter. Bolt it in place. This is called a "sister" or "sistering." The sister pieces should be long enough to help the original rafter bear on plates or beams. (FIG. 3)

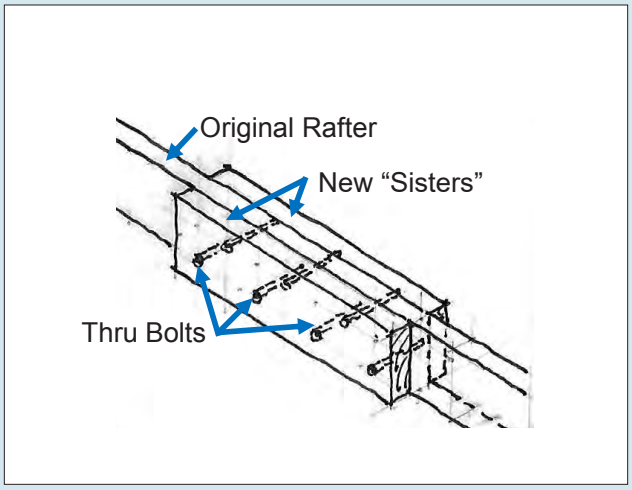

FIG. 3: Inadequate sized lumber used to span a distance. Causes sagging of beams. Add a piece of lumber to assists, called a "sister beam."

FIG. 4: Additional weight of gas heater could causes beam to sag.

FIG. 5: Deterioration of wood member due to water damage or bugs.

FIG. 6: Column between kitchen and dance floor has been modified. Modified columns may need to be reinforced.

FIG. 7: In this case, a column was removed and the structure now bears on steel cable. This modification may compromise the structure and should be evaluated by a professional.

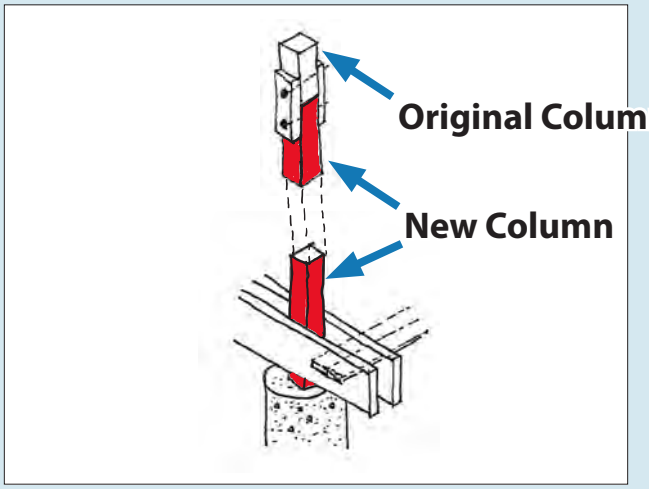

FIG. 8: When replacing a missing column, make sure the new column has a strong foundation and that it is securely attached to the existing piece of column.

ii. Long Term: A structural engineer should assess the structure and make recommendations.

Problem: Missing or modified columns
Sometimes an existing column has been removed or modified to widen an opening, or to create an obstructed view of the dance floor. This means the beam running above the column is no longer adequately supported, and a serious sag may occur.
(FIG. 6, FIG. 7)

Treatment:

i. Immediate: Add a post beneath the beam where a column used to be. It is wise to make sure the new post is aligned with adequate support below the floor. (FIG. 8)

ii. Long Term: A structural engineer should assess the structure and make recommendations.

LEANING WALL PROBLEMS

Columns and walls play a critical role in the structural stability of a building. A visual inspection will reveal if the building walls and columns are out of alignment, in other words they are not vertically straight, or often referred to as "out of plumb."

Problem: Poor foundation
A failing wall or column can often be attributed to a poor or failing foundation or settlement of posts.

Treatment:

i. Immediate: Prop up the leaning wall. This does not have to be complicated – simply wedge a 2X4 or 2X6 between the ground and the wall to keep the wall from leaning further. Placing a board across the face of the wall to give added support to the 2X4's would assist in the stabilization the building. (FIG. 9, FIG. 10)

ii. Long Term: Check the foundation and confirm that it is adequate. Consult a structural engineer or a qualified foundation company to make an assessment and provide advice on repairs required.

Problem: The walls and columns are not braced
The load from the roof may be too great for the size of the columns or the construction of the walls. If the walls or columns aren't braced or bracketed to carry the loads and resist the lateral forces, the loads may be pushing a column or wall out of alignment. If the entire dance hall is leaning in one direction or another this is called racking. This is a serious condition and can lead to the collapse of the building.

Treatment:

i. Immediate: Brace the walls with 2X4's or 2X6's. X bracing may help stabilize the walls. Or Y bracing at the columns, may help to distribute the load. (FIG. 10)

ii. Long Term: A structural engineer should assess the structural forces on the walls or columns and make recommendations.

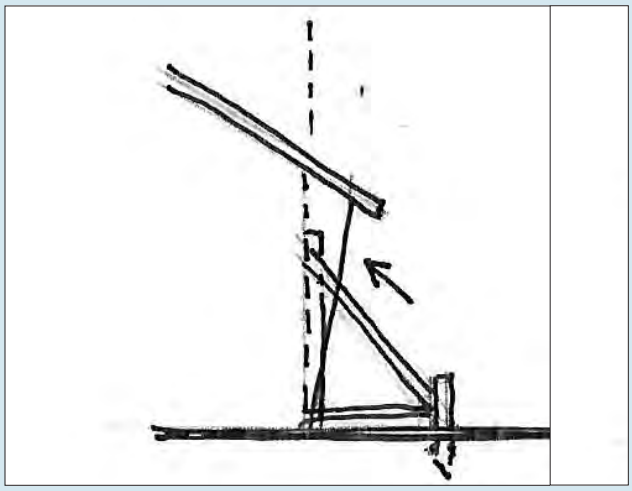

FIG. 9: Leaning buildings should be temporarily propped up until a more thorough solution can be found.

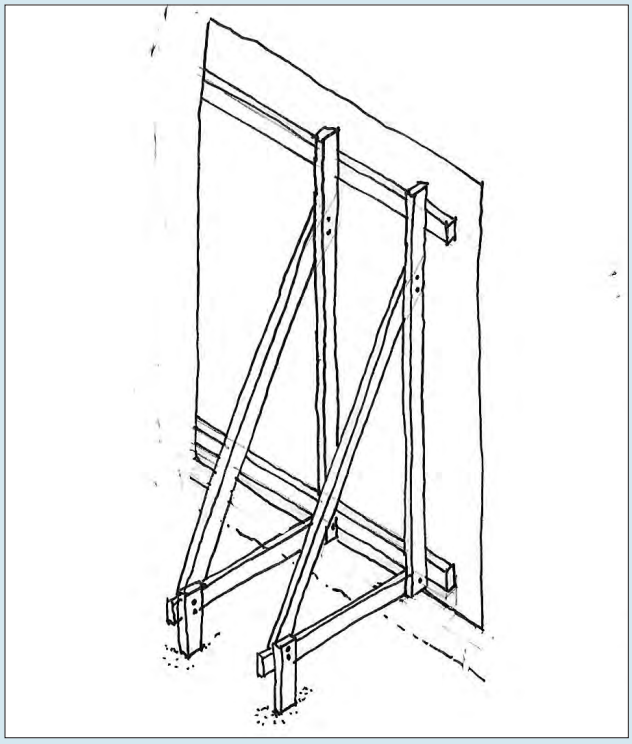

FIG. 10: Detail of bracing to stabilize a wall.

INTERIOR FRAMING: UNSTABLE WALL

Interior walls that separate different rooms such as a wall between restrooms and kitchens may be load bearing walls. That is, they bear the weight of the roof structure above. If these walls are removed, or large openings are made without proper support this may cause added stress to the structure resulting in a dangerous situation. It is important to determine which walls on the interior are load bearing.

Problem: Missing or modified bearing walls

Sometimes a bearing wall has been removed to create a larger space, or a large opening is added to provide access to an adjacent bar. This usually results in a sagging beam or a drooping wall above the opening. (FIG. 11)

Treatment:

i. Immediate: Add support posts beneath the beam where the wall used to be. It is wise to make sure the new posts align with adequate support below the floor. In the case of an opening, insert posts if there is something to bear on like a supported counter or add a beam across the top that bears on a solid wall on either side of the opening. (FIG. 12)

ii. Long Term: A structural engineer should assess the structure and make recommendations. Generally, they will be able to tell if the immediate solution is adequate.

FIG. 11: Bearing wall removed to expand stage. Note sagging beam, add support post.

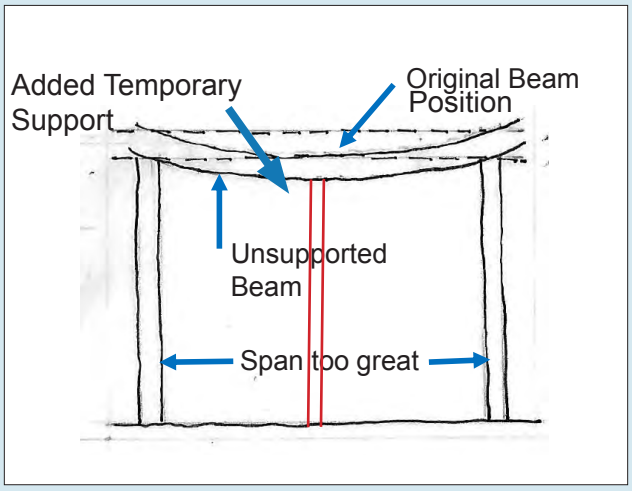

FIG. 12: A diagram of a sagging beam, add post to center to give temporary support.

FIG. 13: Deteriorating bearing walls. Note damage to the floor as well.

FIG. 14: Collapsed addition. Remove if possible, to stop drag on main building.

Problem: Rotten or damaged bearing wall
A bearing wall located beside a restroom or kitchen may also be a plumbing wall. Leaks in the plumbing over time may have caused serious damage to the bearing capacity of the wall. (FIG. 13)

Treatment:

i. Immediate: Remove the sheathing from the interior wall until the framing is exposed. After examining the studs for rot, remove damaged studs and add new studs in the wall. These can be placed adjacent to the old studs if the floor below and studs are still sound. If the floor is also damaged, you will need to be sure that there is something stable to bear on below the floor. It may require adding a new post or beam in the foundation.

ii. Long Term: A structural engineer should assess the structure and make recommendations.

Problem: A collapsed wall
Sometimes on a vacant building a non-load bearing wall has failed or an addition collapsed. This can put additional strain on interior bearing walls. (FIG. 14)

Treatment:

i. Immediate: Remove the collapsed addition or failed wall to relieve the strain on the building structure.

UNSTABLE FOUNDATION PROBLEMS

Shifting foundations are the primary cause of an unstable building. A visual inspection of the dance floor will reveal clues to an unstable foundation. Dips and buckling in the dance floor are indications of trouble. A visual inspection underneath can identify various unstable conditions outlined below. The single most important thing that will protect foundations is to keep water away and to prevent water from running underneath the building.

FIG. 15: Shifting foundation may place support columns at awkward angles. Monitor with plumb bob from top of post.

FIG. 16: Wood foundation post on ground exposed to active water. Keep dry to prevent rot. Note rotting post.

Problem: Shifted foundations

Over time, a dance hall's foundation may have shifted. This could be due to varying soil conditions, weight distribution, severe weather exposure (such as tornadoes or hurricanes), active water under the building, or other stresses on the building. Looking under the building, the posts will be at awkward angles, rather than vertical and in plumb. (FIG. 15, FIG. 16)

Treatment:

i. Immediate: Foundations problems are serious problems that need expert advice. Some foundations shifts happened so long ago, that the building has reached an equilibrium and is not in danger of imminent collapse. An experienced foundation company may be able to assist. In the meantime, hang a plumb bob from the top of a leaning post, measure the distance the post is out of vertical. Return in a few weeks or months and measure the distance at the same point. If the distance is greater you will know you have active movement and you need to take action to repair the foundation immediately.

ii. Long Term: If there is no movement in the foundation, and it seems to be stable – it still is a long term problem that needs to be addressed. Consult a structural engineer or a qualified foundation company who may be able to assist.

Problem: Unsupported beams or missing post

Sometimes the span of the beams between post is too great for the size of the beam, causing the floor above to sag. Other times a post might be missing, or it may have settled and is no longer in contact with the beam. (FIG. 17)

Treatment:

i. Immediate: Add another temporary post half way between the existing posts or shim the post tight to the beam. This post can set directly on the ground, but it is better to have it rest on a concrete pad available at lumber stores.

ii. Long Term: Engage a qualified foundation company to assess the entire foundation system.

Problem: Damaged posts

Sometimes the posts used to support the beams of the foundation are damaged from water, dry rot or insects. These posts can no longer support the load they once did. If it is easy to insert a knife into the post, the post has been compromised. (FIG. 18)

Treatment:

i. Immediate: The post should be replaced with a new post. This work is best performed by an experienced foundation repair company.

ii. Long Term: Consult a structural engineer or a qualified foundation company who may be able to assist.

Problem: Water erosion

If surface water from a rain event is allowed to run under the dance hall, it has the potential to erode the soil around a foundation or buried posts. (FIG. 19)

FIG. 17: Unsupported beam due to shifted column. Note brick post above has shifted, causing unsupported beam.

FIG. 18: Rotting post due to moisture.

FIG. 19: Water erosion due to flooding under dance hall.

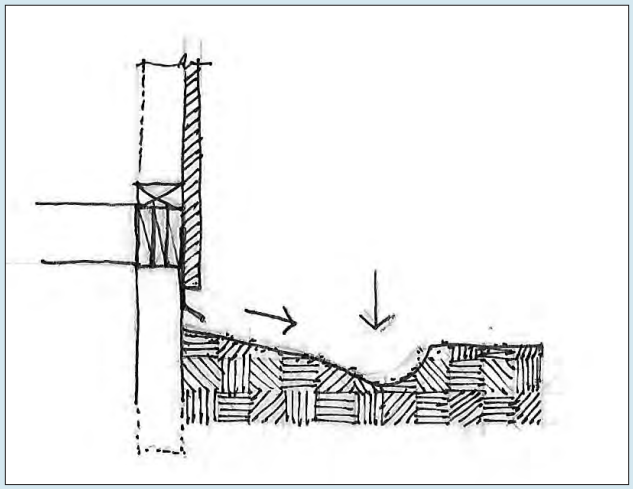

FIG. 20: Create a trench to keep water away from the building foundation.

FIG. 21: Inadequate footing: concrete blocks can collapse.

Treatment:

i. Immediate: Replace any missing dirt fill to secure the foundation posts or walls. Compress the fill to stabilize as much as possible. Dig a shallow trench, or create a small dam to divert water around the or away from the building. (FIG. 20)

ii. Long Term: Hire a civil engineer to design a plan for re-grading the entire site so that water flows across the site and does not run under the building.

Problem: Inadequate footing

It is not uncommon in old dance halls, to find foundation posts that rest on pieces of loose stone that sit directly on the ground. Over time these stones may crack because of weight, or shift from being directly under the posts. This can cause the post to separate from floor beam causing the floor to sag. Foundations resting on the ground also do not provide any lateral support against racking. (FIG. 21)

Treatment:

i. Immediate: Replace broken stone footing with new stone, or concrete pad available at local lumber yards. Use shims to make sure there is a tight fit between post and beam.

ii. Long Term: Consider re-doing the foundation to extend supporting posts into the ground at least three feet. This will provide lateral support for the footing which will help resist strong winds. Also consider providing a traditional spread footing under the post.

Problem: Improperly ventilated crawl space

Is the foundation properly ventilated for good air circulation? Most dance hall foundations are pier and beam, elevating them above the ground. The air circulation below the floor is vital to keeping it dry. Proper ventilation is needed. (FIG. 22)

Treatment:

i. Immediate: Don't put a solid apron around the building to hide the elevated foundation. Lattice-like aprons are fine or vents placed around the perimeter to allow for air circulation. (FIG. 23)

ii. Long Term: Install non-rotting building aprons (metal or cementious board) that extend at least twelve inches into the ground to keep animals out. Add vents for proper circulation.

FIG. 22: Skirting is attractive but may hinder proper ventilation of foundation to keep it dry. Note mold on skirting, indicating moisture.

FIG. 23: A larger vent is recommended to increase air circulation within the foundation and under the dance hall.

BUILDING ADDITION PROBLEMS

Over time, additions were often made to the original dance hall structure. Functions such as kitchens, restrooms, ticket booths, etc. were attached on the outside of the building. Often problems can be found at the intersection of these additions, such as a leaky roof, or a sagging wall, or where the addition is literally dragging the main building down.

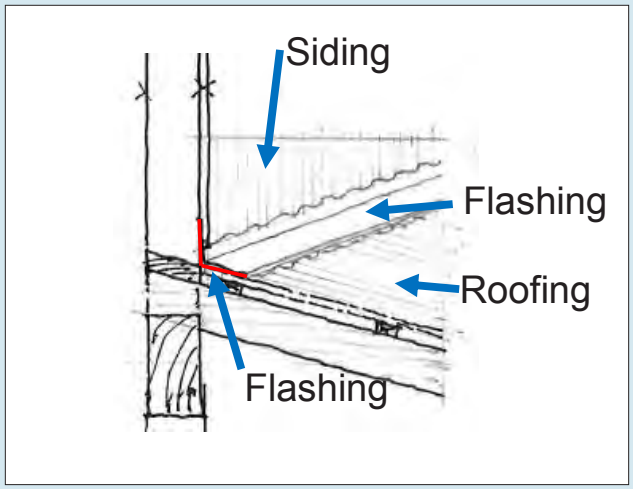

FIG. 24: Section showing flashing detail.

FIG. 25: Addition with failing foundation.

Problem: Addition not properly flashed
Flashing is a metal shield that is put between one structure and a lower structure at the joint to ensure that water does not enter a structure through the joint.

Treatment:

i. Immediate: Add a piece of metal flashing to protect the joint from water entering the building. Be sure and slip the flashing under the bottom edge of the siding. (FIG. 24)

ii. Long Term: Remove the siding from the highest structure and insert the flashing under the outside siding.

Problem: Addition's foundation is inadequate or poorly constructed
If the addition was hastily built, or was originally intended as a temporary structure (such as a shade structure that was eventually enclosed) there may be no foundation or the floor joist might be sitting directly on the ground. (FIG. 25)

Treatment:

i. Immediate: If the addition is pulling on main building -causing it to lean either inward or outward - separate the addition from the main structure. If the addition is not significant or in extremely dilapidated condition – remove the addition. Cover any openings with marine grade or painted plywood.

ii. Long Term: Repair the foundation and structure of the addition if possible. Replace holes or openings in original building with materials.

DANCE FLOOR PROBLEM

While dance floor problems such as holes, rotten wood, or buckling are not in and of themselves a stabilization problem, they are good indicators of other problems.

Problem: Determine the cause of the problem
Rotten or damaged floors often indicate a leak in the roof above. They can also indicate termite problems. Buckled floors are an indication of a foundation problem, creating stresses in the floor structure. (FIG. 26, FIG. 27)

Treatment:

i. Immediate: Identify the source of the problem such as a leaky roof or a poor foundation and then solve the cause of the problem. Cover the damaged area with plywood to prevent someone from stepping through the hole or damaged floor.

ii. Long Term: Replace the damaged floor with wood flooring that is the same species and size.

FIG. 26: Hole in the floor caused by leaking roof.

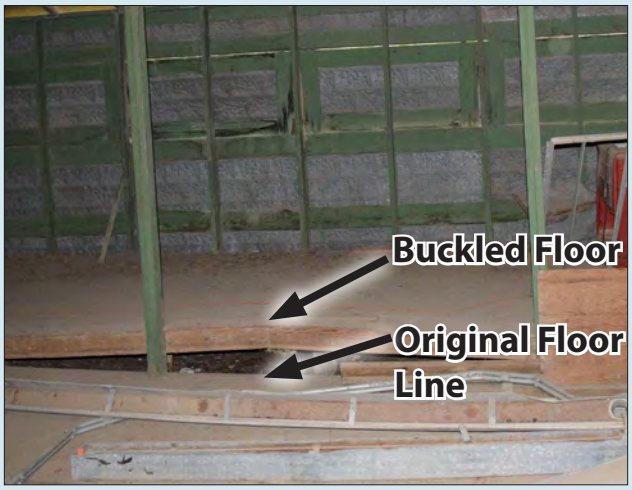

FIG. 27: Floor to left of the center post is buckling upward, which may be result of leaking roof or shift in the foundation.

SITE PROBLEMS

Stabilization problems associated with the site of a dance hall are almost always about water drainage, and more specifically water that runs under the site weakening the foundation system.

FIG. 28: Downhill slope to corner of dance hall will cause problem of pooling water against building.

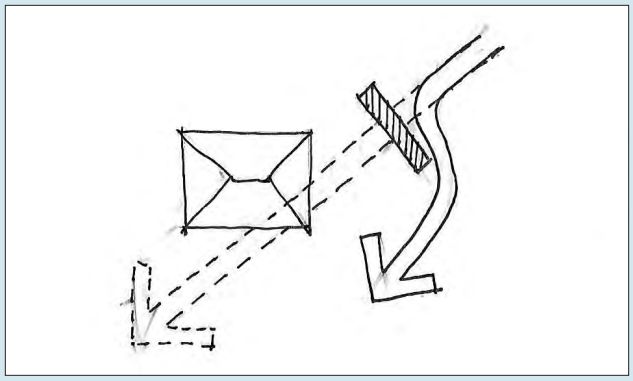

FIG. 29: Create a small dam to divert water from the building foundation.

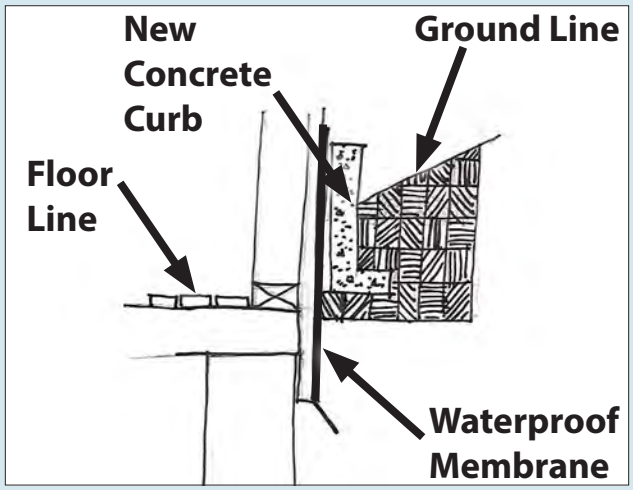

FIG. 30: For soil above floor line add waterproof membrane and a concrete curb.

Problem: Slope of the site
All sites have some sort of slope. In a rainstorm event the water will seek the lowest point of the site. If the path to the lowest spot runs under a building, damage can occur by eroding foundations. If the lowest spot on the site is under the building, pooling water can also undermine the foundation, by displacing soil and rotting posts. (FIG. 28)

Treatment:

i. Immediate: Dig a shallow trench (FIG. 20), or create a small dam (FIG. 29) to divert water around the dance hall and away from the building.

ii. Long Term: Hire a civil engineer to design a plan for re-grading the entire site so that water flows across the site and does not run under the building.

Problem: Floor level is below grade
On sloping sites, it is possible that the dance hall is literally tucked into the site. This can create a condition of the floor level being below the natural grade. This condition causes wood siding, wood joists and wood perimeter beams to be in direct contact with the ground, which accelerates deterioration of the wood. (FIG. 29)

Treatment:

i. Immediate: Create a water barrier that separates the wood from being in direct contact with the ground. Weatherproof membrane, such as plastic or vinyl sheathing is a quick fix. (FIG. 30)

ii. Long Term: Dig a trench to allow separation of the ground and the wood and add a concrete wall to hold the ground away from the building and add sheet

metal flashing at the base of the building.

Problem: Location near creeks that are prone to flooding

Unfortunately, some dance halls are located in low lying areas that are prone to flooding. (FIG. 31, FIG. 32)

Treatment:

i. Immediate: A quick fix of this problem is likely not possible. Preventative measures to reduce the damage include sand bags at openings to keep water out or earthen levees to keep water contained in the creek.

ii. Long Term: Work with county flood control on flood prevention measures upstream. Consider raising the building above the prevailing flood level. Ideally, raising the elevation would be done with assistance of a preservation architect. (FIG. 33)

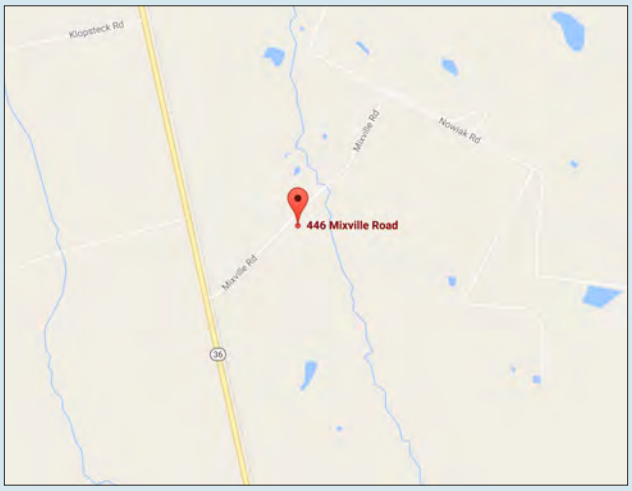

FIG. 31: Dance hall near Allen's Creek that is prone to flooding.

FIG, 32: Aerial of dance hall showing its proximity to Allen's Creek.

FIG. 33: Dance hall near creek. Another authority needs to work with owners to divert creek away from dance hall.

B WEATHERIZATION:
PROBLEMS AND TREATMENTS

Weatherization of your dance hall means securing the exterior of the building (called the building envelope) from leaking rainwater and from biological pests like molds and insects. A building must be made and kept water tight if it is to survive. Since keeping the rain water out of the building is critical, a first priority is fixing roof leaks.

Since most dance halls are made of wood, the following remarks will assume that the hall's primary building material is wood. Wood is a remarkably resilient material with great strength in relation to its density. However, if the wood in your building becomes damp, or worse, remains damp for a long time, then it deteriorates swiftly for a number of reasons. The presence of moisture in too large a quantity is the key to wood preservation problems.

Moisture can rot wood in other ways besides the wet/dry cycle of leaking rainwater. Fungi and molds, if there is sufficient water available, will "eat" wood and weaken structures. If water is pooling around foundation piers, it must be stopped. Damp foundations rot wood and make them unstable, particularly if the wood beams are resting on the ground and not on stone, concrete, or brick piers. Last, insects that infest wooden buildings and eat structural beams and trusses cause expensive problems. The following pictures and comments give short and long term fixes for weatherization problems.

ROOF PROBLEM

Problem: Water Leaks

Finding the roof leak is not always easy, as rainwater does not always run downhill. (Sometimes it runs between old and new layers of roofing and emerges in a different spot.) However, the major culprits for roof leaks on sloped roofs are often where the roofing materials have been penetrated, meaning projections originating from within the building and through the roof plane: stacks and vent pipes; fans and ventilators; exhaust and supply hoods; and plumbing for roof mounted mechanical systems. Around these points, the roof flashing has failed. Secondly, joints between building additions and their lean-to roofs are another source of water leaks. Flat roofs on building additions are another notorious source of leaks, as they tend to "pond" water, and then leak. Often flat roofs have a "membrane" roof that fails. (FIG. 34)

FIG. 34: Holes in the roof need immediate repair.

FIG. 35: A tar paper patch is a quick fix.

Treatment:

i. Immediate: If there is an obvious, gaping hole in the roof, a quick patch of tar paper will keep the water out until all new roofing or a roofing patch can be acquired. (FIG. 35) Flashing around the roof penetrations should be renewed if the source of the roof leak is not obvious. Extend it vertically and then clamp it around the pipe or stack. On a shed roof adjacent to the main building's roof, flashing again needs to be renewed to seal the joint between the two structures so that water does not run down the walls between the main building and the addition.

Metal roofs, often made of corrugated tin, may need to be repainted to prevent rust. Also, in re-nailing metal panels, remember to put a rubber gasket between the panel

FIG. 36: Metal roofs last a long time if they are painted regularly

FIG. 37: Flat roofs need a "tilt" to get the rain water off.

FIG. 38: All drainage problems are worse at low points.

and the nail to seal the nail hole.

ii. Long Term: Flat roofs should be rebuilt with enough pitch (or "tilt") (FIG. 37) to drain water away from the building. Shingle roofs may need to be replaced and metal roofs may need repainting to prevent rust. (FIG. 36)

Remember:
Steeper is better. Water moves faster off the steeper roof.

Simpler is better. The more a roof plane twists and turns, the more linear feet of flashing, crickets, and folds are made to fail and leak. Recall that the south slope of a shingle roof weathers (and leaks) faster than the north roof plane as the sun fries it more regularly, causing shingles to fail.

Shingles on a steep slope are better than membrane roofs. When they leak, leaks are easier to track and repair. Metal roofs can last "forever" if they are maintained.

All water problems are greater near low points than at high points. Water should not be allowed to accumulate or pool at a failed drainage area. If there are gutters, extend downspouts to move water away from the building. (FIG. 38)

DOOR AND WINDOW PROBLEMS

Problem: Water entering building
Another point of entry for rainwater is through doors and windows (or shutters) that are not sealed tightly. Windows and doors are penetrations of the building envelope and they allow water into the building. An older dance hall will have custom-sized openings, particularly windows, or have shutters with no windows. Each is often of a unique size that will not fit a modern off the shelf window. Door openings are equally unique, and original wood doors and hardware should be cherished and retained as authentic parts of the dance hall.

Treatment:

i. Immediate: Replace any broken glass panes in openings. Repair drop down shutters so that they make a tighter seal with the wall opening. Place a strip of plywood or tin at the top of the door so that it projects and diverts water. (FIG. 39)

ii. Long Term: Renew the flashing around any windows, particularly at the bottom of the window at the sill line where water tends to run. You might consider adding expandible metal weather-stripping around the openings.

Problem: Improperly flashed windows
Sometime, in the near past, windows were installed and now they are leaking. (FIG. 40)

Treatment:

i. Immediate: Cover the windows on the outside with heavy duty plastic sheeting and hold in place with 1X4 nailers. This will keep water from running down the face of the window and leaking into the walls. Make sure the vinyl and nailers extend at least 4 inches beyond the window in all directions.

ii. Long Term: The windows will need to be removed and proper flashing installed.

FIG. 39: Dance halls often have gaps between walls and shutters.

FIG. 40: Water damage below windowsill due to improper flashing

WALL PROBLEM

FIG. 41: Deteriorated wood siding allowing water into building.

FIG. 42: Deteriorated wood siding and holes in the walls allowing water into building.

Problem: Water entering through walls
Water can enter a building through walls if the siding is not water resistant. Water could soak through wood siding if the wood is not painted. Water could enter a building when there are gaps in metal siding panels or wood siding panels. (FIG. 41, FIG. 42)

Treatment:

i. Immediate: If the walls of the dance hall are wood and have gaps where you can see daylight streaming in, replace those missing pieces of wood. Many dance halls have board and batten siding and may need new boards or strips of wood to fill the gaps. If the walls are metal and have gaps, patch and replace like materials with like.

ii. Long Term: If the wood siding is unpainted, use a "breathable" paint. If the siding has been painted in the past, sanding and repainting with an oil-based or "breathable" acrylic paint is an option to seal out the water. CAUTION: old paint may be lead-based, sanding could be dangerous to your health if the paint was applied before 1972, sanding is not recommended.

MOLD/ FUNGI PROBLEM

Problem: Mold and fungi deteriorating wood

Called bio-deterioration, molds and fungi are part of a huge group of pests and threats to wood. Molds and fungi cause wood to decay if too much moisture is present. Mold is a visible form of fungi that attacks the surface of the wood. (FIG. 43) In contrast, fungi attack the wood and grow into the core of a wood beam, leaving behind crumbly substances that cannot bear weight or stress. (FIG. 44) Because the air is always full of mold spores around old wood, it is the moisture content of the wood that makes molds and fungi grow as they feed on the wood. If the moisture content of the wood is between 35-50%, molds/fungi will thrive and they will eat or rot the wood. Below 25% mold and fungal growth is small and their subsequent rot of wood will be minimal. (FIG. 45-47)

Treatment:

To stop mold and fungal growth on wood, it is important to keep moisture content of dance hall wood below twenty-five percent. There are wood preservatives available that fight wood rot, but all chemical treatments carry some sort of toxic hazard to people and animals.

i. Immediate: For molds, which attack the surface of wood, clean off the powdery substance by brushing, sanding, or shallow planing. Molds are usually pink in color or purple. Their presence signals that the moisture content of the wood is high and more damaging attack by fungi could occur. Curing fungal attacks is more difficult, requiring either applications of toxic wood preservatives or by mechanical reinforcement of a structural member or replacement of a wood feature.

ii. Long Term: Keeping the moisture content of the wood low prevents molds and fungi

FIG. 43: Mold on roof

FIG. 44: Deteriorated structure from dry rot.

FIG. 45: Deteriorated floor. Located below exterior grade.

FIG. 46: Mold growing on old wood.

FIG. 47: Mold growing on old roof.

growing on and in wood. Better air circulation, water-resistant roofing, and water diversion around foundations, such as regrading the site, are key to keeping wood dry and below the magic moisture content of twenty-five percent.

BUG PROBLEM

Problem: Damage caused by insects
Insect pests are a threat to the wood in dance halls. Termites and ants thrive in moist wood, but termites can also eat wood in dry spaces. Termites can be spotted by the "tubes" or mud tunnels that they build along a foundation to keep themselves moist during the journey from nests deep in the ground to the wood framing. (FIG. 48-50) Carpenter ants chomp their way through wood even better than termites. These ants are the number one wood pests in the United States. Carpenter ants love moisture and warmth. They don't eat wood, they excavate it. To spot them, look for their frass, which looks like piles of sawdust. (FIG. 52)

Treatment:
Both pesticides and preservatives should be used to eradicate an infestation and prevent future attacks.

i. Immediate: Keep the dance hall dry. Termites and carpenter ants love moisture. Check that water drains away from the hall. Keep all firewood and wood products away from the foundation.

Trim fence slats and any wood trim around the dance hall like door jambs up off the soil.

Remove all wood, cardboard or paper from the crawlspace under the dance floor. If storage is necessary, keep storage off the floor to avoid attracting insects.

ii. Long Term: Have the building profession ally inspected annually for termites and ants. Most importantly, if termites or carpenter ants do infest the hall – don't panic! These insects work very slowly. Take

FIG. 48: Damage caused by termites.


FIG. 49: Termite paths in wall.

FIG. 50: Termite tubes leading to underside of structure.

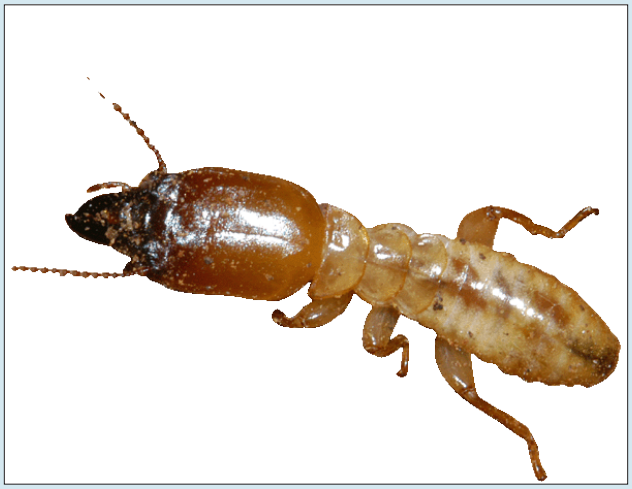

FIG. 51: Formosan termite

FIG. 52: Carpenter ant

your time and find a qualified pest management pro to help you kill them once and for all and then continue the management program.

VEGETATION PROBLEM

Problem: Damage from vegetation
Plants and trees that have grown on or against the building, can damage the dance hall. Make sure that tree roots are not growing under the walls and disturbing the foundation. (FIG. 53)

Treatment:
Remove all vegetation that is growing on or too near the building. Make sure that they do not rub the roof, touch the walls, or climb up the walls. Climbing plants, like ivy, put roots into the walls that damage building joints. Old trees can be uprooted and fall onto the dance hall. (FIG. 54)

i. Immediate: Clear off all climbing plants that cover the walls. For ivies, and other climbing plants, snip their stems (at the base of the plant) so that they die. After the leaves turn brown, they are easily removed.

ii. Long Term: Remove trees and plants that are too close to the building where they can rub on roofs and damage walls and foundations. A registered arborist can trim tree canopies and spot heavy limbs that will become a hazard to the dance hall roof.

FIG. 53: Structure surrounded by vegetation

FIG. 54: Trees leaning on roof.

C SECURITY:
PROBLEMS AND TREATMENTS

After the dance hall is stabilized and weather tight, securing the dance hall is next. Protecting the building from vandalism like graffiti, break-ins, and disasters like a fire will extend the life of the building. Vulnerable points of entry pose a threat to your building. Fire can also be caused by vandalism or faulty utilities. Since the dance halls are often isolated out in the country, fire fighting equipment is not readily available and buildings can be quickly destroyed before help arrives.

SECURITY PROBLEMS

Problem: Vandals and nuisance
Vacant dance halls are attractive nuisances. They can be targets of vandalism and school pranks. Dance halls become vulnerable to destruction because of their isolation.

Treatment:

i. Immediate: Notify police and fire authorities that the building is vacant or not regularly used. Leave a key in a nearby secure location and tell authorities where it is located. A knox box containing a key is a useful solution. Securely lock doors, windows and/or shutters. Notify near-by neighbors and give them a telephone number to call if they spot unusual or suspicious activity. (FIG. 55)

ii. Long Term: If the building is going to be vacant for over a year, installing and covering doors and windows with form-fitting panels will secure it. Marine-grade and painted plywood panels and carriage bolts are often used in this case. Consider investing in an intrusion alarm system. Exterior lighting is another security option if electricity to the building is maintained. (FIG. 56, FIG. 57)

FIG. 55: Knox box

FIG. 56: Mothball - exterior. Note semi-permanent covers over window openings and caps on chimneys.

FIG. 57: Broken windows on abandoned building.

FIG. 58: Graffiti on abandoned building.

Problem: Graffiti issues
Graffiti on a building highlights its vacant status and identifies it as a safe place for further vandalism. (FIG. 58)

Treatment:

i. Immediate: Cover graffiti immediately with paint. Graffiti always encourages people to add more graffiti.

ii. Long Term: Consider repainting the entire building.

FIRE

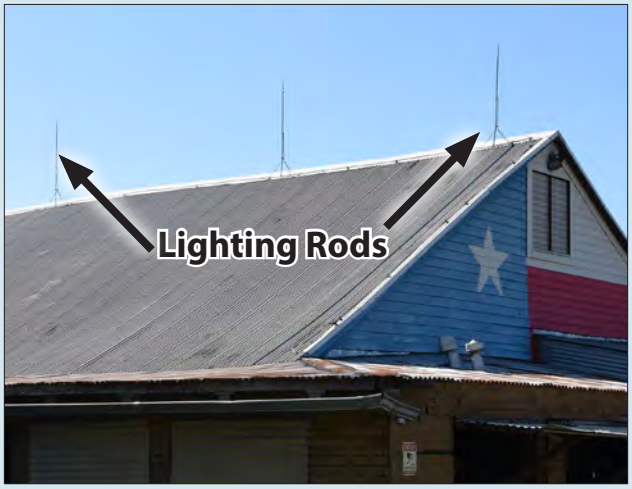

FIG. 59: Lighting rods on roof.

FIG. 60: Smoke detector

Problem: Isolation from fire departments
Securing the building from catastrophic destruction from fire, lightning, or arson is vital. Because of its rural location, help from local fire departments is often a long way away with no nearby standpipes for water supply. A burning wooden building can be in a "full bloom" in just minutes.

Treatment:
Fire Prevention

i. Immediate: Lightning rods that are properly grounded should be a first consideration. (FIG. 59) Also install a fire extinguisher. Smoke detectors that use battery packs can be remotely linked to cell phones or horn systems. (FIG. 60)

ii. Long Term: Consider investing in a sprinkler system. Check that electrical wiring has been renewed to prevent short outs, as they are a fire hazard. Remove flammable materials like paints, paint removers, and cleaning products.

MECHANICAL SYSTEMS/UTILITIES

Problem: Faulty electrical and mechanical systems

Sudden loss due to failure of an internal system, like plumbing, gas, or electricity, is always possible. Preventing electrical and gas fires as well as water leaks due to failure of the dance hall systems is a function of regular maintenance and watchfulness.
(FIG. 61, FIG. 62)

Treatment:

i. Immediate: If building is not going to be heated, then drain water tanks, toilets, and pipes and then add glycol to the water as an "anti-freeze." This will prevent broken pipes that may burst with expansion in freezing weather. Gas systems with open flames should be turned off. Have the utility company shut off gas lines.

ii. Long Term: Install a single-source, cut off point for all electric power if the dance hall is to be vacant for an extended period of time. Consider updating wiring systems and electrical boxes if the wiring is unsafe.

FIG. 61: Electrical box with disconnect.

FIG. 62: Gas fired heaters hanging from wood structure.

HOUSEKEEPING ISSUES

FIG. 63: Historic backdrop properly stored in ceiling above kitchen.

FIG. 64: Well kept dance floor.

Problem: Storage and maintenance issues
Flammable liquids, poisons, paints and canned goods that could freeze or burst are a threat to dance halls. Excess dirt and debris can damage wooden dance floors. Storing heavy objects or equipment can strain floor framing. Historic benches and backdrops can be ruined if not properly stored. (FIG. 63) Historic artifacts can disappear.

Treatment:

i. Immediate: A live load on the dance floor is a very different strain on the floor versus the static load of a heavy machine, so move any heavy equipment off the dance floor and store elsewhere. Broom clean the dance floor as ground in sand and dirt can damage the unique oak and pine dance floors. (FIG. 64)

ii. Long Term: Find dry and secure places to store historic dance hall artifacts. Clean out any supplies in the kitchen and maintenance areas that are old, expired, or dangerous and could harm people or the property. Some supplies may freeze and then burst their containers.

CHAPTER 4: CHECKLIST

What to look for and how often is contained in the following charts of checklists and maintenance pages. Establish a loose-leaf notebook to contain this Toolkit, the checklists and the maintenance records. Hard copy records are invaluable to future users of the dance halls.

For the long term, we suggest a maintenance log. Buy a big, loose-leaf, three-ring binder to keep track of all the maintenance you've completed. Snap in a copy of this toolkit plus those receipts for ordinary maintenance. Include records of construction changes to your building. Place old photos of the building in the maintenance log, too. Your successors, in the years to come, will thank you. All your hard work of dance-hall maintenance will be noted and used for future work. Last, tell them where the spare key is, just in case of an emergency.

Inspection Checklist

SUGGESTION	SCHEDULE	YEAR			
Site Clean Up	Every 6 Months				
Mowing Pruning & Trimming	Every 6 Months				
Gutter & Downspout Check	Every 6 Months				
Check Crawlspace for Bugs and Leaks	Every 6 Months				
Clean Out Storm Drainage	Every 6 Months				
Broken Windows? Any Graffiti/Vandalism?	Every 6 Months				
Moisture Damage?	Every 6 Months				
Working Fire Extinguisher and/or Alarm?	Every 6 Months				
Broom Clean Floor	Every 6 Months				
Maintenance Contract for Utilities	Every 12 Months				
Maintenance Contract for Equipment	Every 12 Months				
Check Roof for Loose/ Missing Shingles	Every 12 Months				
Termite/Pest Inspection Treatment	Every 12 Months				
Exterior Materials Repair & Painting	Every 12 Months				
Broken Windows? Vandalism?	Every 12 Months				
Check & Update Building File	Every 12 Months				

Maintenance Record for a Year

CONDITION	STATUS	RECORD OF CURRENT TREATMENT
STABILIZATION		
Wall System		
Roof		
Foundation		
Site		

Maintenance Record for a Year

CONDITION	STATUS	RECORD OF CURRENT TREATMENT
STABILIZATION		
Wall System		
Roof	Roof Needs Replacement	Roof Repaired- November, 2017 (receipt attached)
Foundation		
Site		

CHAPTER 5: FINDING A PROFESSIONAL

Once in a while, you will need the advice and help of a structural engineer familiar with old buildings. Or you may needs the services of a historic architect or some other historic preservation professional to assess the condition of your building.

To find a structural engineer who has worked with old buildings and old foundations, etc., call Texas Dance Hall Preservation, the non-profit organization who sponsored this book. Their web site is: texasdancehall.org

To find a historic architect who specializes in preserving old buildings, call your local chapter of the Texas Society of Architects, which is part of the American Institute of Architects (AIA). Talk to the person listed as the “Membership Contact.” The web site is: texasarchitects.org/wordpress/chapters-local-leadership/

Another source for knowing how to find a professional preservation architect can be found on the Texas Historical Commission website: http://www.thc.texas.gov/hiring-preservation-consultant.

Glossary of Terms:

Beam - a long, sturdy piece of squared timber spanning an opening or part of a building, usually to support the roof or floor above.

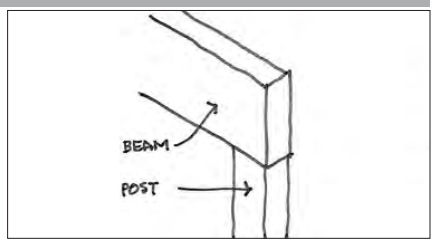

Board-and-Batten Siding - a siding consisting of long vertical boards and thin strips, or battens; the battens are used to conceal the gaps between the siding boards.

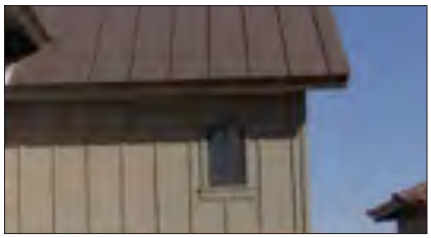

Buckled Floors - buckled wood flooring is flooring that has lifted off of its subflooring. It is caused by moisture, either spilled water from above or seeping water from below.

Building Skirt - sometimes called a building apron, a building skirt is placed around a building's raised foundation to close off and hide the crawl space.

Cantilever - a long projecting beam or girder fixed at only one end and projecting from a wall to support a balcony, cornice, or similar structure.

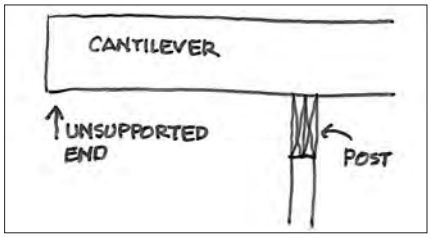

Composition Shingles - shingles made from a mixture of binder materials with fibers, also called asphalt shingles.

Joist - a length of timber or steel supporting part of a structure of a building, typically arranged in parallel series to support a floor or ceiling. These are smaller members than beams.

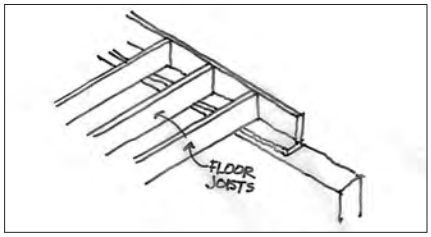

Glossary of Terms:

Marine-grade Plywood - a sturdy grade of plywood, suitable for outside construction in an inhospitable climate.

Pitched Roof - a roof that has a slope to it, particularly a steep slope.

Rafters - a length of timber, sloped and extended from the roof ridge to the wall plate, and designed to support the roof deck. Exposed rafters are an important feature of dance halls.

Ridge Beam - the top-most beam of a roof structure, running along the spine of the roof.

Roof Truss - a framing member of a roof truss system.

Roof Truss System - a framework, typically consisting of rafters, posts and struts, and designed to support a roof.

Sheathing - a protective covering or casing.

Glossary of Terms:

Structural Stabilization - make or become unlikely to give way or overturn, as in the structure is stable.

Studs - an upright support in the wall of a building to which sheathing or dry wall is attached. (See typical wall section in platform framing at right.)

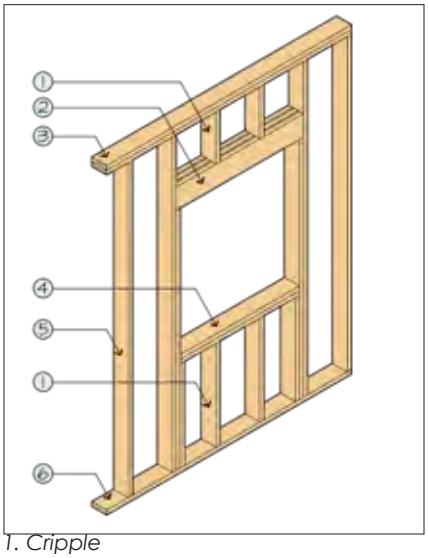

1. Cripple
2. Window Header
3. Top Plate / Upper Wall Plate
4. Window Sill
5. Stud
6. Sill Plate / Sole Plate / Bottom Plate

RESOURCES

Auer, Michael J. 1989. Preservation Brief 20: The Preservation of Historic Barns. Washington, D.C.: Government Printing Office. Accessed September 20, 2017. https://www.nps.gov/tps/how-to-preserve/briefs/20 -barns.htm

Austin County Historical Commission. 1993. Dance Halls of Austin County.

Dean, Stephen. 2014. Images of America: Historic Dance Halls of East Central Texas. Charleston, South Carolina: Arcadia Publishing.

Fitch, James Marston. 1998. Historic Preservation: Curatorial Management of the Built World. Charlottesville: University Press of Virginia.

Harris, Samuel Y. 2001. Building Pathology: Deterioration, Diagnostics, and Intervention. New York: John Wiley & Sons, Inc.

McDougal, Stephanie L. 2008. "The Round Dance Halls of Texas: History of a Building Type, 1897-1937." MTSC thesis, University of Texas.

Park, Sharon C. 1993. Preservation Briefs 31: Mothballing Historic Buildings. Washington, D.C.: Government Printing Office. Accessed September 13, 2017. https://www.nps.gov/tps/how-to-preserve/briefs/31-mothballing.htm

Weaver, Martin E., and F.G. Matero. 1997. Conserving Buildings; A Manual of Techniques and Materials, Revised. New York, N.Y.: John Wiley & Sons, Inc.

TEXAS
DANCE
HALL
PRESERVATION
ESTD 2007